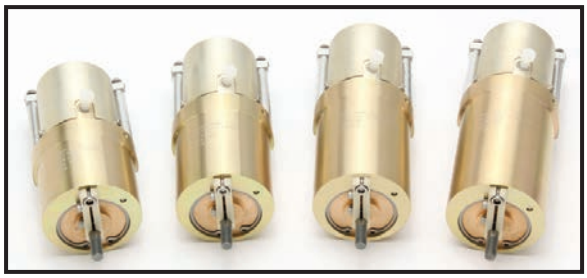

JASC®

FlexJet® SERVO

Product Ordering Guide

P/N 101790

1.0 Inch Bore FlexJet Actuator (No Null Bias)

Configuration	Bore x Stroke
101790-1	1.0″ x 0.5″
101790-2	1.0″ x 1.0″
101790-3	1.0″ x 1.5″
101790-4	1.0″ x 2.0″

P/N 101641

1.0 Inch Bore FlexJet Actuator (With Null Bias)

Configuration	Bore x Stroke
101641-1	1.0″ x 0.5″
101641-2	1.0″ x 1.0″
101641-3	1.0″ x 1.5″
101641-4	1.0″ x 2.0″

Stall Load @ 100 PSIG

Extension: 62 Lb. Minimum

Retraction: 58 Lb. Minimum

Slew Rate @ 100 PSIG

4.0 In./Sec. Minimum

REVISIONS			
REV.	DATE	DESCRIPTION	BY
NC	1/24/2019	Initial Release	MET

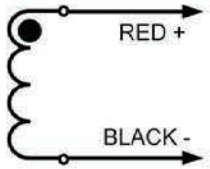

ELECTRICAL SCHEMATIC

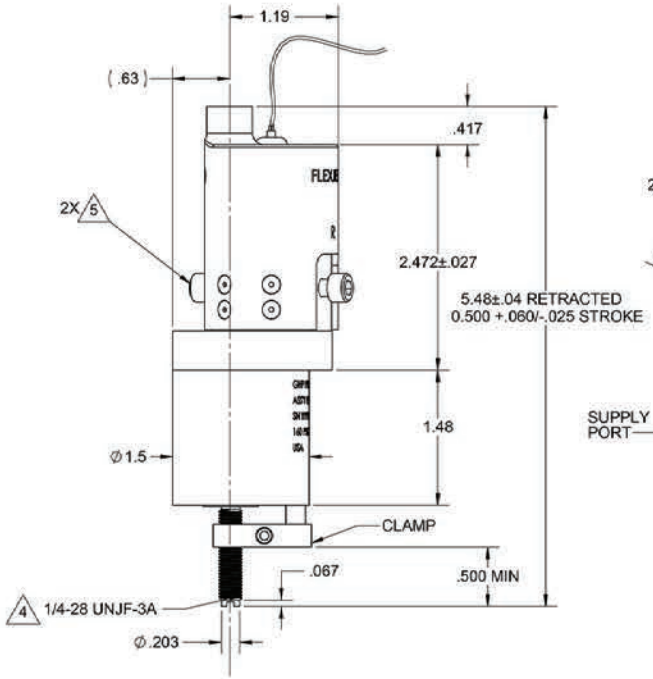

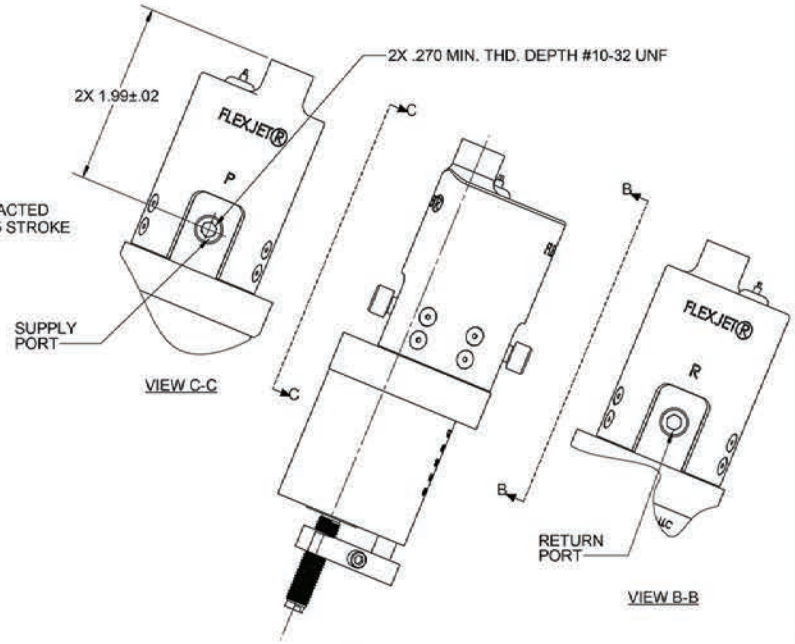

5 SHIPPING PLUG TO BE REMOVED BEFORE INSTALLATION

4 A 1/4-28 UNF JAM NUT IS RECOMMENDED TO INADVERTENT TORQUING OF CLAMP FROM CUSTOMER-ATTACHED FITTINGS

3 A NON-MAGNETIC INTERFACE BOLT IS REQUIRED

2. REF. PERFORMANCE CHARACTERISTICS:

MEDIA: DRY AIR OR N2 FILTERED TO 25 MICRON ABS MINIMUM OR BETTER

FLOW RATE: 0.8 SCFM @ 100 PSIG

TEMPERATURE: -20°F TO 160°F, OPERATING

PRESSURE
- OPERATING: 80 TO 160 PSIG
- PROOF: 250 PSIG
- BURST: 425 PSIG

MECHANICAL
- PISTON DIA.: 1.00 IN.
- ROD DIAMETER: 0.25 IN.
- STALL LOAD, EXT.: 62 LBS @ 80 PSIG
- RET.: 58 LBS @ 80 PSIG

ELECTRICAL
- COIL RESISTANCE: 250 ± 25 OHMS
- VOLTAGE: 0 TO +10 V
- CONNECTORS: #24 AWG FLYING LEADS, 12 INCHES MIN

POLARITY: RED+ VOLTAGE = ACTUATOR EXTENDS

SEALS: NITRILE

1. DESIGNED IN ACCORDANCE WITH GARNER HOLT PRODUCTIONS PERFORMANCE REQUIREMENTS

NOTES: UNLESS OTHERWISE SPECIFIED

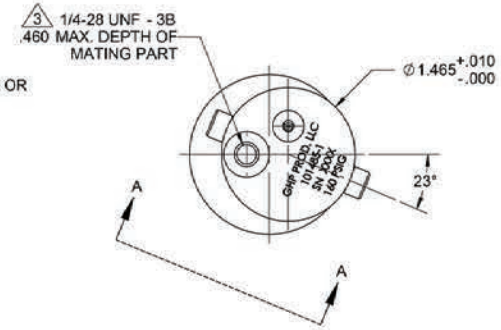

INTERFACE CONTROL DRAWING

THIS PRINT IS THE PROPERTY OF JASC AND REPRESENTS A PROPRIETARY ARTICLE TO WHICH JASC RETAINS THE EXCLUSIVE RIGHT OF USE AND/OR SALE. THIS PRINT IS DISCLOSED IN CONFIDENCE AND POSSESSION OF IT DOES NOT CONVEY PERMISSION TO MANUFACTURE THE ARTICLE OR ARTICLES SHOWN HEREIN: SUCH PERMISSION BEING GRANTED ONLY BY SPECIFIC AUTHORIZATION IN WRITING SIGNED BY AN OFFICER OF JASC.

JASC®
Tempe, Arizona

DIMENSIONS APPLY AFTER PLATING
BREAK SHARP EDGES .005 - .015
MACHINED SURFACES .005 - .020R MACHINED FILLETS

REFERENCE PDM

APPLICATION

UNLESS OTHERWISE SPECIFIED
DIMENSIONS ARE IN INCHES
SYMBOLS PER ANSI Y14.5
ALL COMMON ℄ DIA. Ø0.005
TOLERANCES ARE:

FRACTIONS	DECIMALS	ANGLES
± 1/64	.X ±.1	±1°
	.XX ±.010	
	.XXX ±.005	
	.XXXX ±.0010	

CONTRACT NO.

APPROVALS		DATE
DRAWN	KJM	1/9/19
CHECKED	JFC	1/18/19
CHECKED		
CHECKED		

TITLE: ACTUATOR, 1.0D X 0.5L

SIZE	CAGE	DWG. NO.
C	ØR293	ICD-101790-1

SCALE: 1:1 WEIGHT: 0.768 lbs SHT 1 OF 1

101790-1 OUTLINE NC

REVISIONS			
REV.	DATE	DESCRIPTION	BY
NC	8/30/2018	Initial Release	KJM

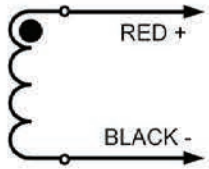

ELECTRICAL SCHEMATIC

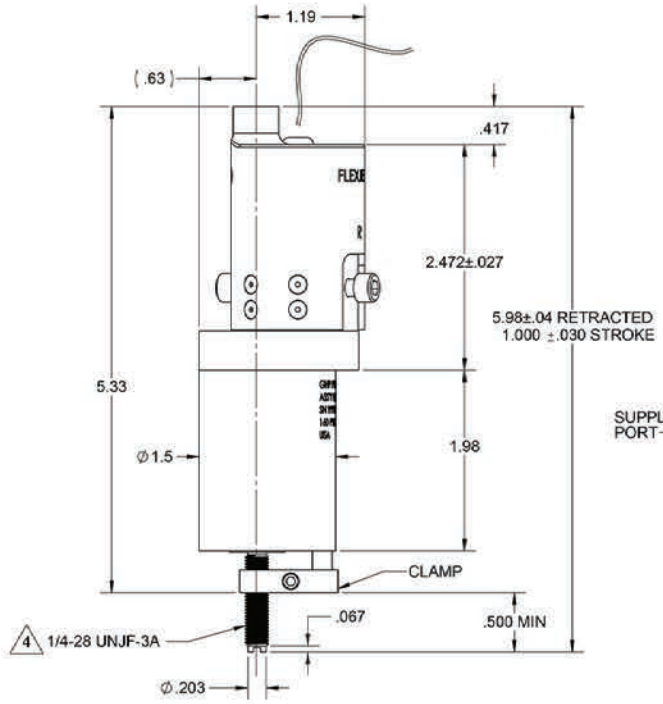

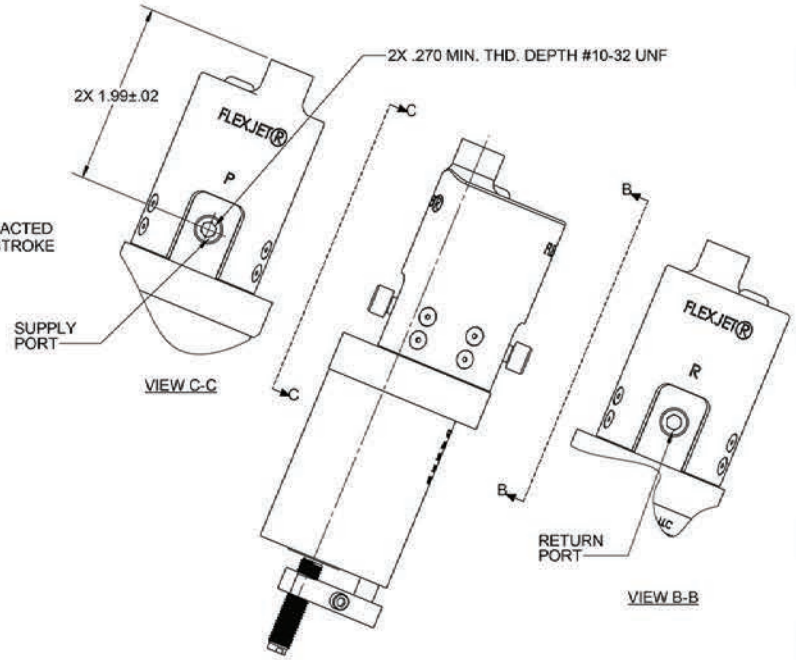

4 A 1/4-28 UNF JAM NUT IS RECOMMENDED TO INADVERTENT TORQUING OF CLAMP FROM CUSTOMER-ATTACHED FITTINGS

3 A NON-MAGNETIC INTERFACE BOLT IS REQUIRED

2. REF. PERFORMANCE CHARACTERISTICS:

MEDIA: DRY AIR OR N2 FILTERED TO 25 MICRON ABS MINIMUM OR BETTER

FLOW RATE: 0.8 SCFM @ 100 PSIG

TEMPERATURE: -20°F TO 160°F, OPERATING

PRESSURE
- OPERATING: 80 TO 160 PSIG
- PROOF: 250 PSIG
- BURST: 425 PSIG

MECHANICAL
- PISTON DIA.: 1.00 IN.
- ROD DIAMETER: 0.25 IN.
- STALL LOAD, EXT.: 62 LBS @ 80 PSIG
- RET.: 58 LBS @ 80 PSIG

ELECTRICAL
- COIL RESISTANCE: 250 ± 25 OHMS
- VOLTAGE: 0 TO +10 V
- CONNECTORS: #24 AWG FLYING LEADS, 12 INCHES MIN

POLARITY: RED+ VOLTAGE = ACTUATOR EXTENDS

SEALS: NITRILE

1. DESIGNED IN ACCORDANCE WITH GARNER HOLT PRODUCTIONS PERFORMANCE REQUIREMENTS

NOTES: UNLESS OTHERWISE SPECIFIED

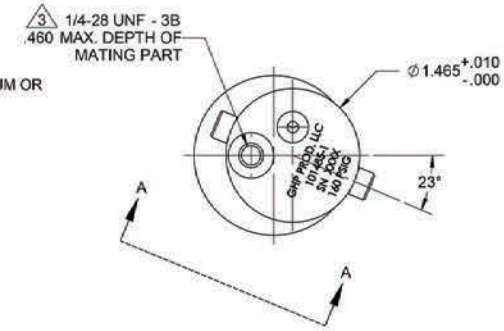

INTERFACE CONTROL DRAWING

THIS PRINT IS THE PROPERTY OF JASC AND REPRESENTS A PROPRIETARY ARTICLE TO WHICH JASC RETAINS THE EXCLUSIVE RIGHT OF USE AND/OR SALE. THIS PRINT IS DISCLOSED IN CONFIDENCE AND POSSESSION OF IT DOES NOT CONVEY PERMISSION TO MANUFACTURE THE ARTICLE OR ARTICLES SHOWN HEREIN: SUCH PERMISSION BEING GRANTED ONLY BY SPECIFIC AUTHORIZATION IN WRITING SIGNED BY AN OFFICER OF JASC.

JASC®
Tempe, Arizona

DIMENSIONS APPLY AFTER PLATING
BREAK SHARP EDGES .005 - .015
MACHINED SURFACES .005 - .020R MACHINED FILLETS

REFERENCE PDM

APPLICATION

UNLESS OTHERWISE SPECIFIED
DIMENSIONS ARE IN INCHES
SYMBOLS PER ANSI Y14.5
ALL COMMON ℄ DIA. Ø.005
TOLERANCES ARE:
FRACTIONS ± 1/64 | DECIMALS .X ±.1, .XX ±.010, .XXX ±.005, .XXXX ±.0010 | ANGLES ±1°

CONTRACT NO.

APPROVALS		DATE
DRAWN	KJM	4/23/18
CHECKED	JFC	06/14/18
CHECKED		
CHECKED		

TITLE: ACTUATOR, 1.0D X 1.0L

SIZE	CAGE	DWG. NO.
C	ØR293	ICD-101790-2

SCALE: 1:1 | WEIGHT: 0.767 lbs | SHT 1 OF 1

101790-2 OUTLINE | NC

REVISIONS			
REV.	DATE	DESCRIPTION	BY
NC	1/24/2019	Initial Release	MET

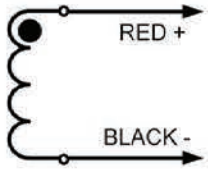

ELECTRICAL SCHEMATIC

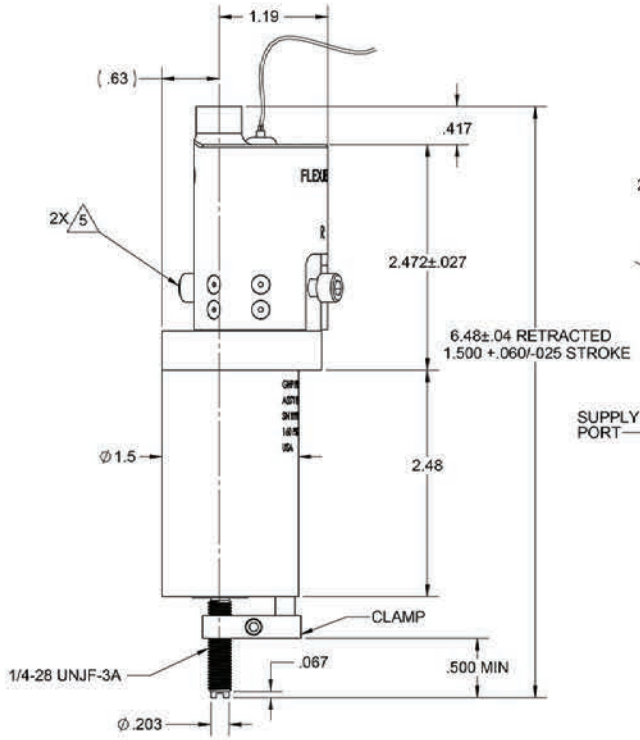

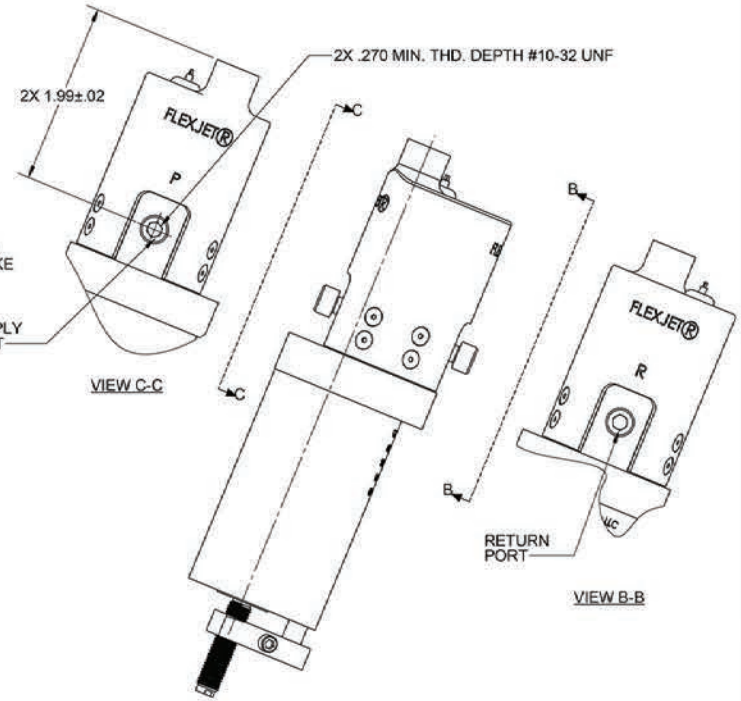

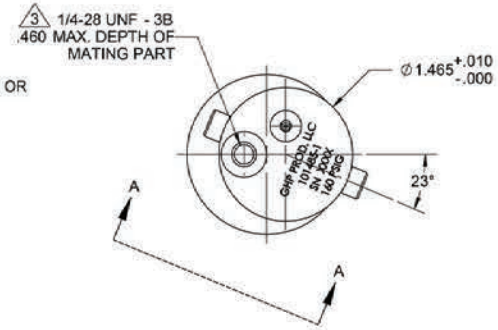

5 SHIPPING PLUG TO BE REMOVED BEFORE INSTALLATION

4 A 1/4-28 UNF JAM NUT IS RECOMMENDED TO INADVERTENT TORQUING OF CLAMP FROM CUSTOMER-ATTACHED FITTINGS

3 A NON-MAGNETIC INTERFACE BOLT IS REQUIRED

2. REF. PERFORMANCE CHARACTERISTICS:

MEDIA: DRY AIR OR N2 FILTERED TO 25 MICRON ABS MINIMUM OR BETTER

FLOW RATE: 0.8 SCFM @ 100 PSIG

TEMPERATURE: -20°F TO 160°F, OPERATING

PRESSURE
- OPERATING: 80 TO 160 PSIG
- PROOF: 250 PSIG
- BURST: 425 PSIG

MECHANICAL
- PISTON DIA.: 1.00 IN.
- ROD DIAMETER: 0.25 IN.
- STALL LOAD, EXT.: 62 LBS @ 80 PSIG
- RET.: 58 LBS @ 80 PSIG

ELECTRICAL
- COIL RESISTANCE: 250 ± 25 OHMS
- VOLTAGE: 0 TO +10 V
- CONNECTORS: #24 AWG FLYING LEADS, 12 INCHES MIN

POLARITY: RED+ VOLTAGE = ACTUATOR EXTENDS

SEALS: NITRILE

1. DESIGNED IN ACCORDANCE WITH GARNER HOLT PRODUCTIONS PERFORMANCE REQUIREMENTS

NOTES: UNLESS OTHERWISE SPECIFIED

INTERFACE CONTROL DRAWING

THIS PRINT IS THE PROPERTY OF JASC AND REPRESENTS A PROPRIETARY ARTICLE TO WHICH JASC RETAINS THE EXCLUSIVE RIGHT OF USE AND/OR SALE. THIS PRINT IS DISCLOSED IN CONFIDENCE AND POSSESSION OF IT DOES NOT CONVEY PERMISSION TO MANUFACTURE THE ARTICLE OR ARTICLES SHOWN HEREIN: SUCH PERMISSION BEING GRANTED ONLY BY SPECIFIC AUTHORIZATION IN WRITING SIGNED BY AN OFFICER OF JASC.

JASC®
Tempe, Arizona

DIMENSIONS APPLY AFTER PLATING
BREAK SHARP EDGES .005 - .015
MACHINED SURFACES .005 - .020R MACHINED FILLETS

REFERENCE
PDM

APPLICATION

UNLESS OTHERWISE SPECIFIED
DIMENSIONS ARE IN INCHES
SYMBOLS PER ANSI Y14.5
ALL COMMON ℄ DIA. ⌀0.005

TOLERANCES ARE:
FRACTIONS ± 1/64
DECIMALS X ±.1, .XX ±.010, .XXX ±.005, .XXXX ±.0010
ANGLES ±1°

CONTRACT NO.		
APPROVALS		DATE
DRAWN	KJM	1/9/19
CHECKED	JFC	06/14/18
CHECKED		
CHECKED		

TITLE: ACTUATOR, 1.0D X 1.5L

SIZE	CAGE	DWG. NO.
C	ØR293	ICD-101790-3

SCALE: 1:1 WEIGHT: 0.880 lbs SHT 1 OF 1

101790-3 OUTLINE NC

REVISIONS			
REV.	DATE	DESCRIPTION	BY
NC	1/24/2019	Initial Release	MET

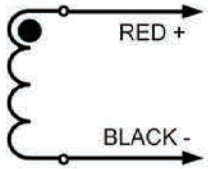

ELECTRICAL SCHEMATIC

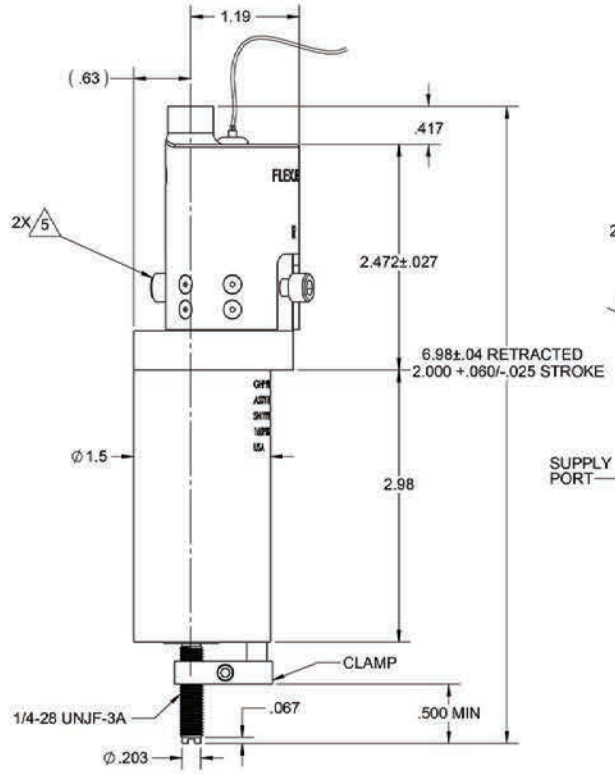

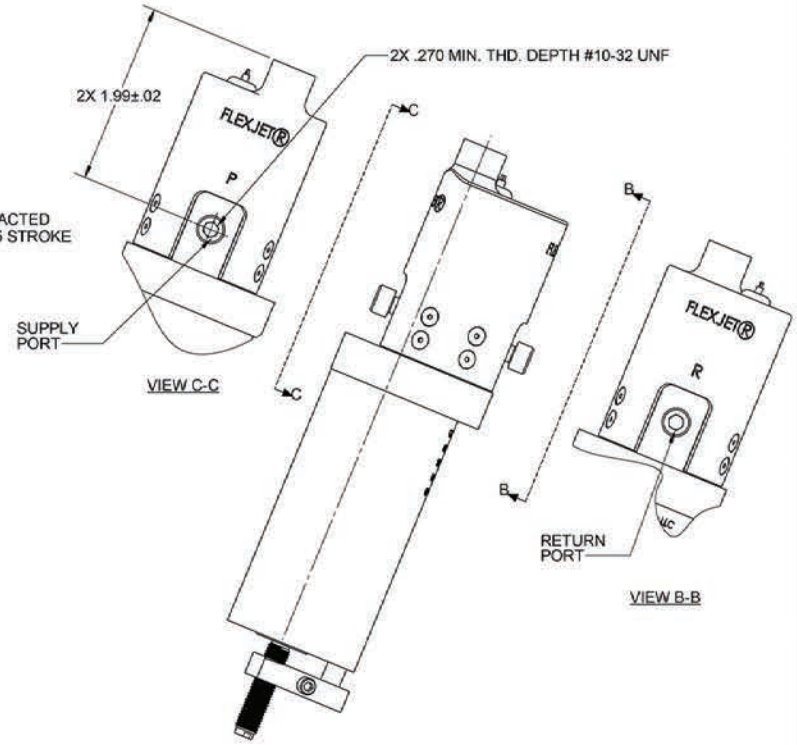

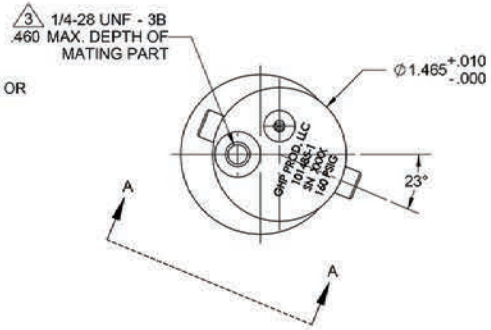

5 SHIPPING PLUG TO BE REMOVED BEFORE INSTALLATION

4 A 1/4-28 UNF JAM NUT IS RECOMMENDED TO INADVERTENT TORQUING OF CLAMP FROM CUSTOMER-ATTACHED FITTINGS

3 A NON-MAGNETIC INTERFACE BOLT IS REQUIRED

2. REF. PERFORMANCE CHARACTERISTICS:

MEDIA: DRY AIR OR N2 FILTERED TO 25 MICRON ABS MINIMUM OR BETTER

FLOW RATE: 0.8 SCFM @ 100 PSIG

TEMPERATURE: -20°F TO 160°F, OPERATING

PRESSURE
- OPERATING: 80 TO 160 PSIG
- PROOF: 250 PSIG
- BURST: 425 PSIG

MECHANICAL
- PISTON DIA.: 1.00 IN.
- ROD DIAMETER: 0.25 IN.
- STALL LOAD, EXT.: 62 LBS @ 80 PSIG
  - RET.: 58 LBS @ 80 PSIG

ELECTRICAL
- COIL RESISTANCE: 250 ± 25 OHMS
- VOLTAGE: 0 TO +10 V
- CONNECTORS: #24 AWG FLYING LEADS, 12 INCHES MIN

POLARITY: RED+ VOLTAGE = ACTUATOR EXTENDS

SEALS: NITRILE

1. DESIGNED IN ACCORDANCE WITH GARNER HOLT PRODUCTIONS PERFORMANCE REQUIREMENTS

NOTES: UNLESS OTHERWISE SPECIFIED

INTERFACE CONTROL DRAWING

THIS PRINT IS THE PROPERTY OF JASC AND REPRESENTS A PROPRIETARY ARTICLE TO WHICH JASC RETAINS THE EXCLUSIVE RIGHT OF USE AND/OR SALE. THIS PRINT IS DISCLOSED IN CONFIDENCE AND POSSESSION OF IT DOES NOT CONVEY PERMISSION TO MANUFACTURE THE ARTICLE OR ARTICLES SHOWN HEREIN: SUCH PERMISSION BEING GRANTED ONLY BY SPECIFIC AUTHORIZATION IN WRITING SIGNED BY AN OFFICER OF JASC.

JASC®
Tempe, Arizona

DIMENSIONS APPLY AFTER PLATING
BREAK SHARP EDGES .005 - .015
MACHINED SURFACES .005 - .020R MACHINED FILLETS

REFERENCE
PDM

APPLICATION

UNLESS OTHERWISE SPECIFIED
DIMENSIONS ARE IN INCHES
SYMBOLS PER ANSI Y14.5
ALL COMMON ℄ DIA. Ø.005

TOLERANCES ARE:
FRACTIONS ± 1/64 | DECIMALS X ±.1, .XX ±.010, .XXX ±.005, .XXXX ±.0010 | ANGLES ±1°

CONTRACT NO.

APPROVALS		DATE
DRAWN	KJM	1/9/19
CHECKED	JFC	06/14/18
CHECKED		
CHECKED		

TITLE: ACTUATOR, 1.0D X 2.0L

SIZE	CAGE	DWG. NO.
C	ØR293	ICD-101790-4

SCALE: 1:1 | WEIGHT: 0.931 lbs | SHT 1 OF 1

101790-4 OUTLINE | NC

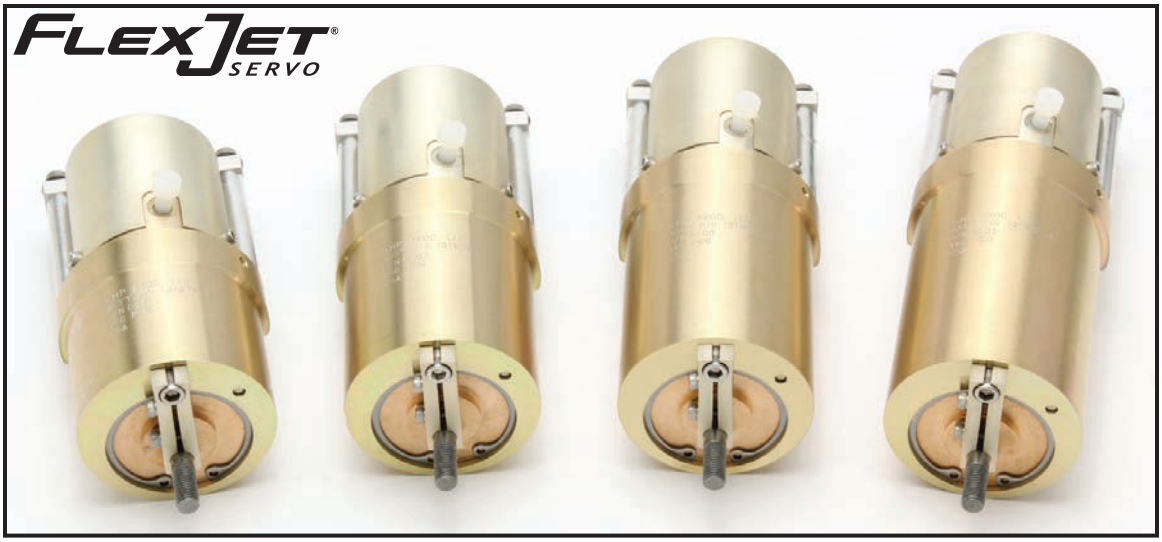

P/N 101791

1.5 Inch Bore FlexJet Actuator

Configuration	Bore x Stroke
101791-1	1.5″ x 0.5″
101791-2	1.5″ x 1.0″
101791-3	1.5″ x 1.5″
101791-4	1.5″ x 2.0″

Stall Load @ 100 PSIG

Extension: 140 Lb. Minimum

Retraction: 136 Lb. Minimum

Slew Rate @ 100 PSIG

6.0 In./Sec. Minimum

REVISIONS			
REV.	DATE	DESCRIPTION	BY
NC	8/12/2019	Initial Release	JFC

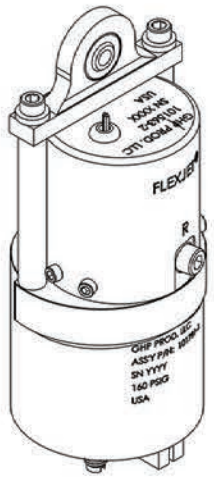

ISO VIEW

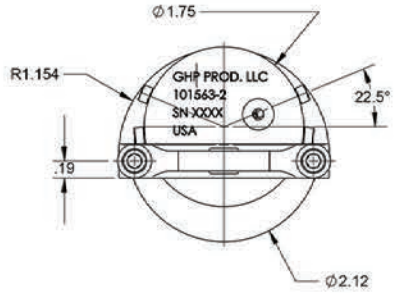

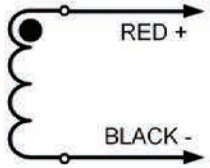

ELECTRICAL SCHEMATIC

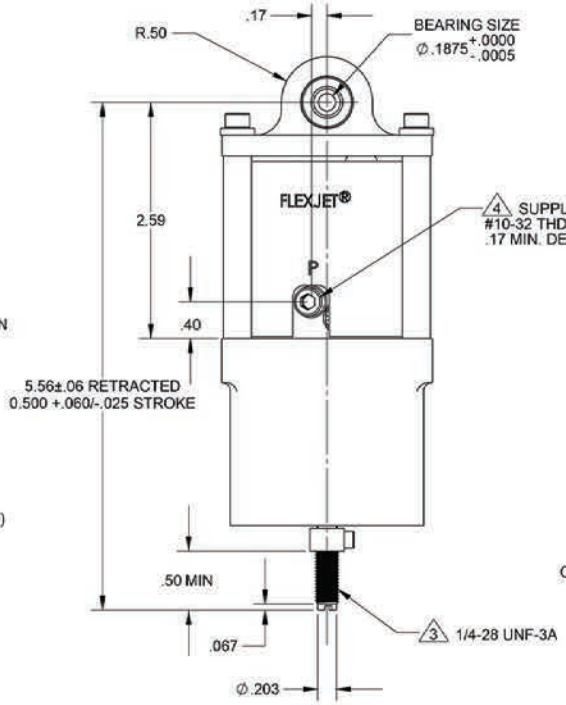

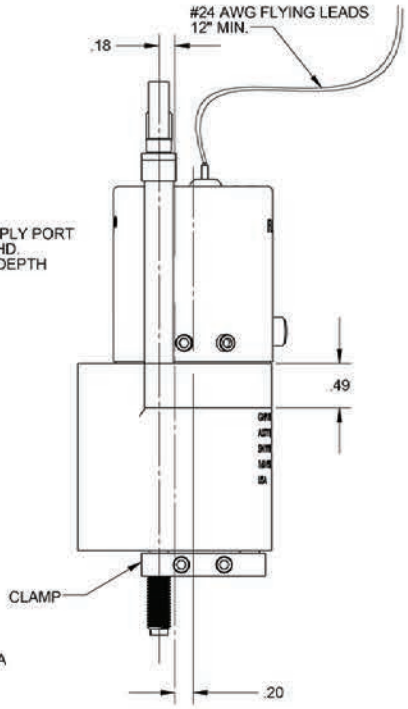

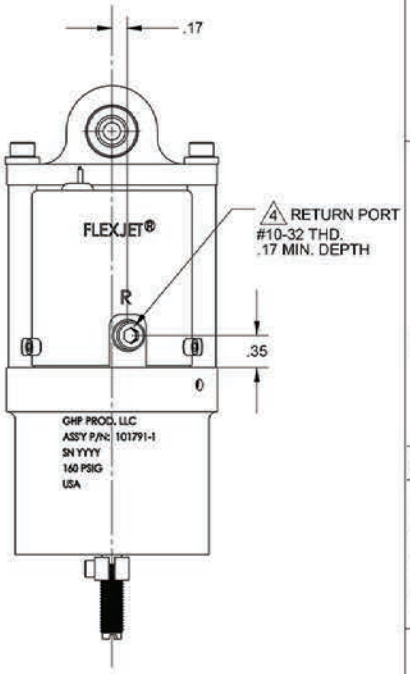

4 SHIPPING PLUG TO BE REMOVED BEFORE INSTALLATION

3 A 1/4-28 UNF JAM NUT IS RECOMMENDED TO PREVENT OVER-TORQUING OF CLAMP ON INSTALLATION

2. REF PERFORMANCE CHARACTERISTICS:

MEDIA: CLEAN, DRY AIR OR N2

FLOW RATE: 2.3 SCFM @ 100 PSIG

FILTRATION: 25 MICRON ABS, INTEGRAL (SERVO ONLY)

TEMPERATURE: -20°F TO +160°F

PRESSURE:
- OPERATING: 80 TO 160 PSIG
- PROOF: 250 PSIG
- BURST: 425 PSIG

MECHANICAL:
- PISTON DIA: 1.50 IN.
- ROD DIAMETER: 0.25 IN.
- SLEW RATE: 6.0 IN/SEC MIN. @ 100 PSIG
- STALL LOAD, EXT.: 140 LBS MIN. @ 100 PSIG
- RET.: 136 LBS MIN. @ 100 PSIG
- STROKE: 0.50 IN

ELECTRICAL:
- COIL RESISTANCE: 250 ± 25 OHMS
- VOLTAGE: 0 TO 10 V
- CONNECTION: #24 AWG FLYING LEADS, 12 INCHES MIN.

POLARITY: RED+ = ACTUATOR EXTENDS

SEALS: NITRILE, FLUOROCARBON

1. DESIGNED IN ACCORDANCE WITH GARNER HOLT PRODUCTIONS PERFORMANCE REQUIREMENTS

NOTES: UNLESS OTHERWISE SPECIFIED

INTERFACE CONTROL DRAWING

THIS PRINT IS THE PROPERTY OF JASC AND REPRESENTS A PROPRIETARY ARTICLE TO WHICH JASC RETAINS THE EXCLUSIVE RIGHT OF USE AND/OR SALE. THIS PRINT IS DISCLOSED IN CONFIDENCE AND POSSESSION OF IT DOES NOT CONVEY PERMISSION TO MANUFACTURE THE ARTICLE OR ARTICLES SHOWN HEREIN: SUCH PERMISSION BEING GRANTED ONLY BY SPECIFIC AUTHORIZATION IN WRITING SIGNED BY AN OFFICER OF JASC.

JASC® Tempe, Arizona

DIMENSIONS APPLY AFTER PLATING
BREAK SHARP EDGES .005 - .015
MACHINED SURFACES .005 - .020R MACHINED FILLETS

REFERENCE PDM

APPLICATION

UNLESS OTHERWISE SPECIFIED
DIMENSIONS ARE IN INCHES
SYMBOLS PER ANSI Y14.5
ALL COMMON ℄ DIA. Ø.005

TOLERANCES ARE:

FRACTIONS	DECIMALS	ANGLES
± 1/64	.X ±.1	±1°
	.XX ±.010	
	.XXX ±.005	
	.XXXX ±.0010	

CONTRACT NO.

APPROVALS		DATE
DRAWN	DWK	05/28/19
CHECKED	JFC	08/09/19
CHECKED		
CHECKED		

TITLE: FLEXJET 1.5 x 0.5 ICD

SIZE	CAGE	DWG. NO.
C	ØR293	ICD-101791-1

SCALE: 1:1 WEIGHT: 1.436 lbs SHT 1 OF 1

ICD-101791-1 NC

REVISIONS			
REV.	DATE	DESCRIPTION	BY
NC	8/12/2019	Initial Release	JFC

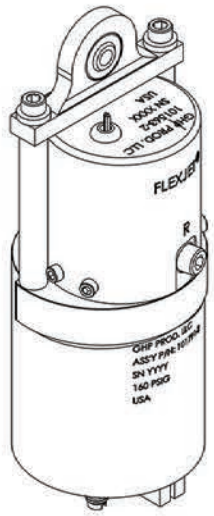

ISO VIEW

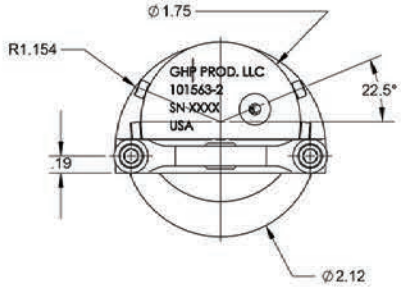

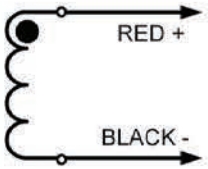

ELECTRICAL SCHEMATIC

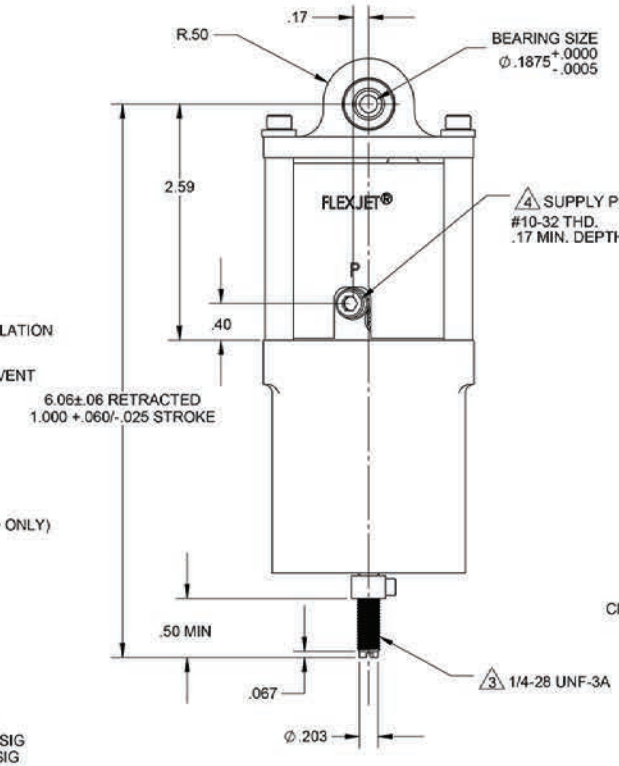

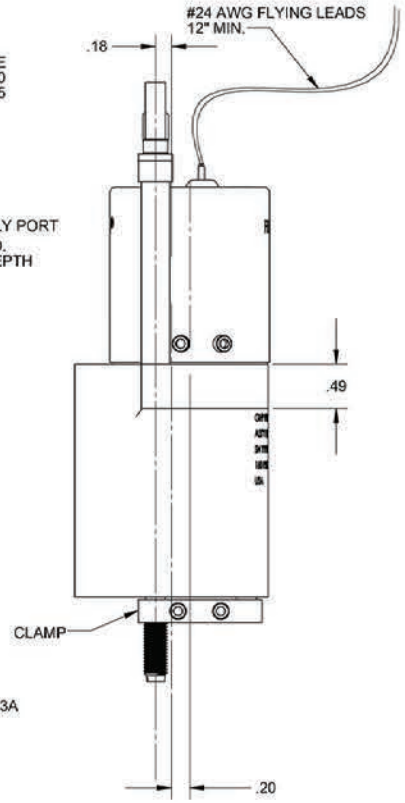

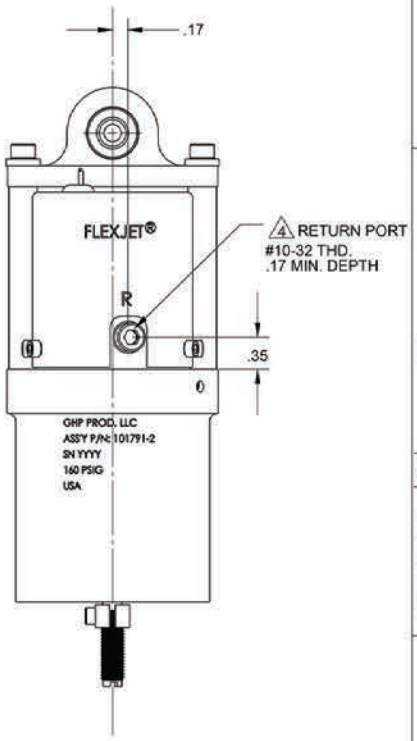

4 SHIPPING PLUG TO BE REMOVED BEFORE INSTALLATION

3 A 1/4-28 UNF JAM NUT IS RECOMMENDED TO PREVENT OVER-TORQUING OF CLAMP ON INSTALLATION

2. REF PERFORMANCE CHARACTERISTICS:

MEDIA: CLEAN, DRY AIR OR N2

FLOW RATE: 2.3 SCFM @ 100 PSIG

FILTRATION: 25 MICRON ABS, INTEGRAL (SERVO ONLY)

TEMPERATURE: -20°F TO +160°F

PRESSURE:
- OPERATING: 80 TO 160 PSIG
- PROOF: 250 PSIG
- BURST: 425 PSIG

MECHANICAL:
- PISTON DIA: 1.50 IN.
- ROD DIAMETER: 0.25 IN.
- SLEW RATE: 6.0 IN/SEC MIN. @ 100 PSIG
- STALL LOAD, EXT.: 140 LBS MIN. @ 100 PSIG
- RET.: 136 LBS MIN. @ 100 PSIG
- STROKE: 1.00 IN

ELECTRICAL:
- COIL RESISTANCE: 250 ± 25 OHMS
- VOLTAGE: 0 TO 10 V
- CONNECTION: #24 AWG FLYING LEADS, 12 INCHES MIN.

POLARITY: RED+ = ACTUATOR EXTENDS

SEALS: NITRILE, FLUOROCARBON

1. DESIGNED IN ACCORDANCE WITH GARNER HOLT PRODUCTIONS PERFORMANCE REQUIREMENTS

NOTES: UNLESS OTHERWISE SPECIFIED

INTERFACE CONTROL DRAWING

THIS PRINT IS THE PROPERTY OF JASC AND REPRESENTS A PROPRIETARY ARTICLE TO WHICH JASC RETAINS THE EXCLUSIVE RIGHT OF USE AND/OR SALE. THIS PRINT IS DISCLOSED IN CONFIDENCE AND POSSESSION OF IT DOES NOT CONVEY PERMISSION TO MANUFACTURE THE ARTICLE OR ARTICLES SHOWN HEREIN: SUCH PERMISSION BEING GRANTED ONLY BY SPECIFIC AUTHORIZATION IN WRITING SIGNED BY AN OFFICER OF JASC.

JASC®
Tempe, Arizona

DIMENSIONS APPLY AFTER PLATING
BREAK SHARP EDGES .005 - .015
MACHINED SURFACES .005 - .020R MACHINED FILLETS

REFERENCE
PDM

APPLICATION

UNLESS OTHERWISE SPECIFIED
DIMENSIONS ARE IN INCHES
SYMBOLS PER ANSI Y14.5
ALL COMMON ℄ DIA. Ø.005

TOLERANCES ARE:

FRACTIONS	DECIMALS	ANGLES
± 1/64	.X ±.1	±1°
	.XX ±.010	
	.XXX ±.005	
	.XXXX ±.0010	

CONTRACT NO.

APPROVALS		DATE
DRAWN	DWK	05/29/19
CHECKED	JFC	08/09/19
CHECKED		
CHECKED		

TITLE: FLEXJET 1.5 x 1.0 ICD

SIZE	CAGE	DWG. NO.
C	ØR293	ICD-101791-2

SCALE: 1:1 | WEIGHT: 1.528 lbs | SHT 1 OF 1

ICD-101791-2 NC

REVISIONS			
REV.	DATE	DESCRIPTION	BY
NC	8/12/2019	Initial Release	JFC

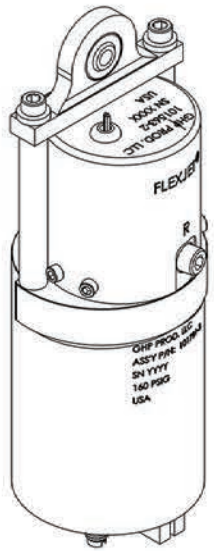

ISO VIEW

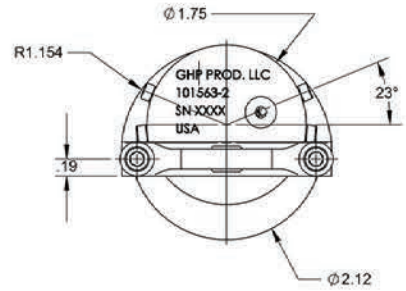

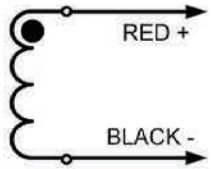

ELECTRICAL SCHEMATIC

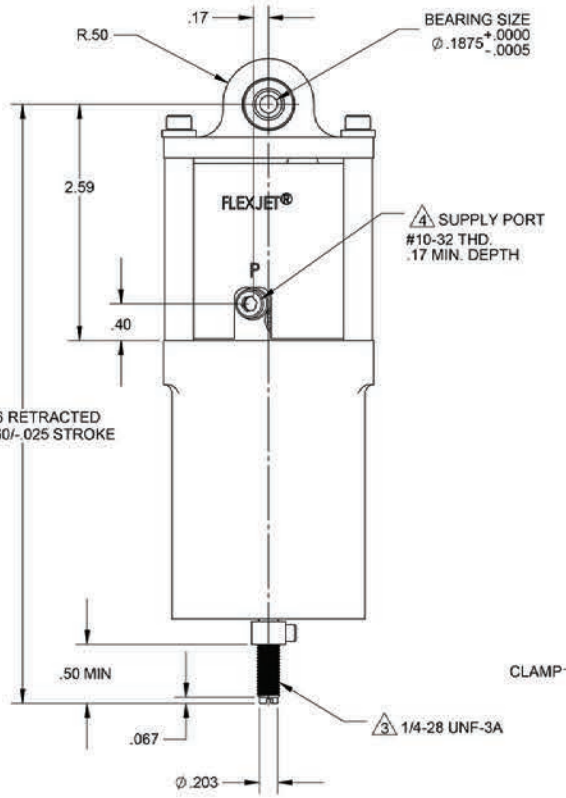

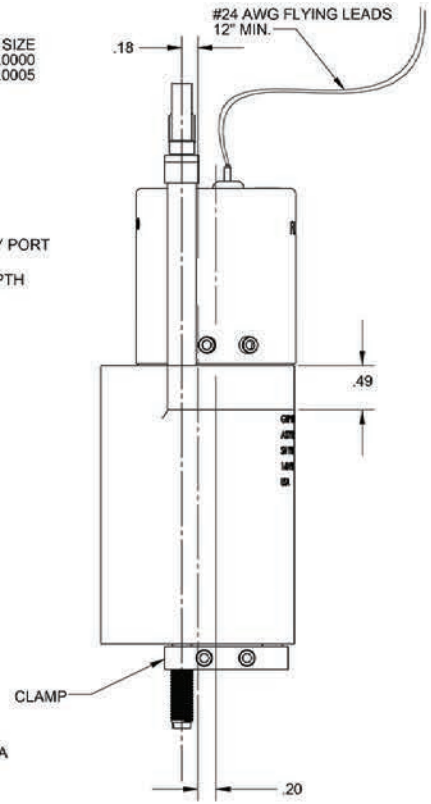

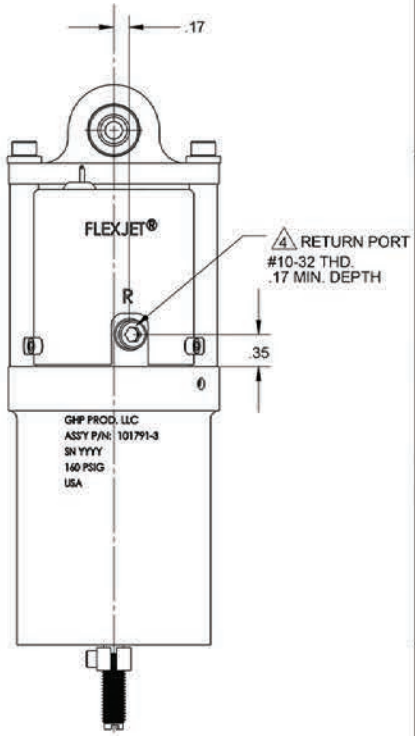

4 SHIPPING PLUG TO BE REMOVED BEFORE INSTALLATION

3 A 1/4-28 UNF JAM NUT IS RECOMMENDED TO PREVENT OVER-TORQUING OF CLAMP ON INSTALLATION

2. REF PERFORMANCE CHARACTERISTICS:

MEDIA: CLEAN, DRY AIR OR N2

FLOW RATE: 2.3 SCFM @ 100 PSIG

FILTRATION: 25 MICRON ABS, INTEGRAL (SERVO ONLY)

TEMPERATURE: -20°F TO +160°F

PRESSURE:
- OPERATING: 80 TO 160 PSIG
- PROOF: 250 PSIG
- BURST: 425 PSIG

MECHANICAL:
- PISTON DIA: 1.50 IN.
- ROD DIAMETER: 0.25 IN.
- SLEW RATE: 6.0 IN/SEC MIN. @ 100 PSIG
- STALL LOAD, EXT.: 140 LBS MIN. @ 100 PSIG
- RET.: 136 LBS MIN. @ 100 PSIG
- STROKE: 1.50 IN

ELECTRICAL:
- COIL RESISTANCE: 250 ± 25 OHMS
- VOLTAGE: 0 TO 10 V
- CONNECTION: #24 AWG FLYING LEADS, 12 INCHES MIN.

POLARITY: RED+ = ACTUATOR EXTENDS

SEALS: NITRILE, FLUOROCARBON

1. DESIGNED IN ACCORDANCE WITH GARNER HOLT PRODUCTIONS PERFORMANCE REQUIREMENTS

NOTES: UNLESS OTHERWISE SPECIFIED

INTERFACE CONTROL DRAWING

THIS PRINT IS THE PROPERTY OF JASC AND REPRESENTS A PROPRIETARY ARTICLE TO WHICH JASC RETAINS THE EXCLUSIVE RIGHT OF USE AND/OR SALE. THIS PRINT IS DISCLOSED IN CONFIDENCE AND POSSESSION OF IT DOES NOT CONVEY PERMISSION TO MANUFACTURE THE ARTICLE OR ARTICLES SHOWN HEREIN: SUCH PERMISSION BEING GRANTED ONLY BY SPECIFIC AUTHORIZATION IN WRITING SIGNED BY AN OFFICER OF JASC.

JASC® Tempe, Arizona

DIMENSIONS APPLY AFTER PLATING
BREAK SHARP EDGES .005 - .015
MACHINED SURFACES .005 - .020R MACHINED FILLETS

REFERENCE PDM

APPLICATION

UNLESS OTHERWISE SPECIFIED
DIMENSIONS ARE IN INCHES
SYMBOLS PER ANSI Y14.5
ALL COMMON ℄ DIA. Ø.005

TOLERANCES ARE:

FRACTIONS	DECIMALS	ANGLES
± 1/64	.X ±.1	±1°
	.XX ±.010	
	.XXX ±.005	
	.XXXX ±.0010	

CONTRACT NO.

APPROVALS		DATE
DRAWN	DWK	05/29/19
CHECKED	JFC	08/09/19
CHECKED		
CHECKED		

TITLE: FLEXJET 1.5 x 1.5 ICD

SIZE	CAGE	DWG. NO.
C	ØR293	ICD-101791-3

SCALE: 1:1 WEIGHT: 1.620 lbs SHT 1 OF 1

ICD-101791-3 NC

REVISIONS			
REV.	DATE	DESCRIPTION	BY
NC	8/12/2019	Initial Release	JFC

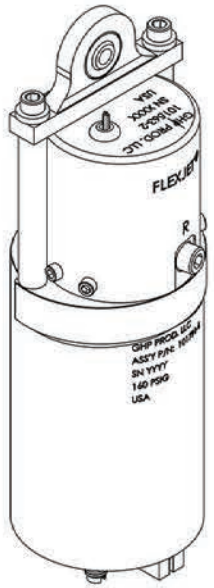

ISO VIEW

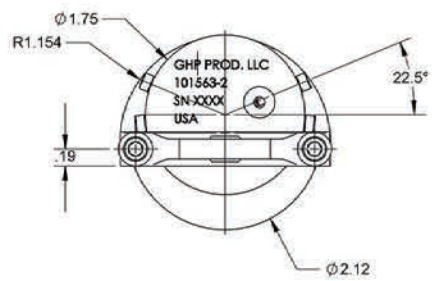

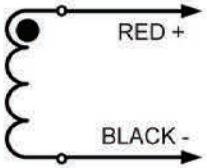

ELECTRICAL SCHEMATIC

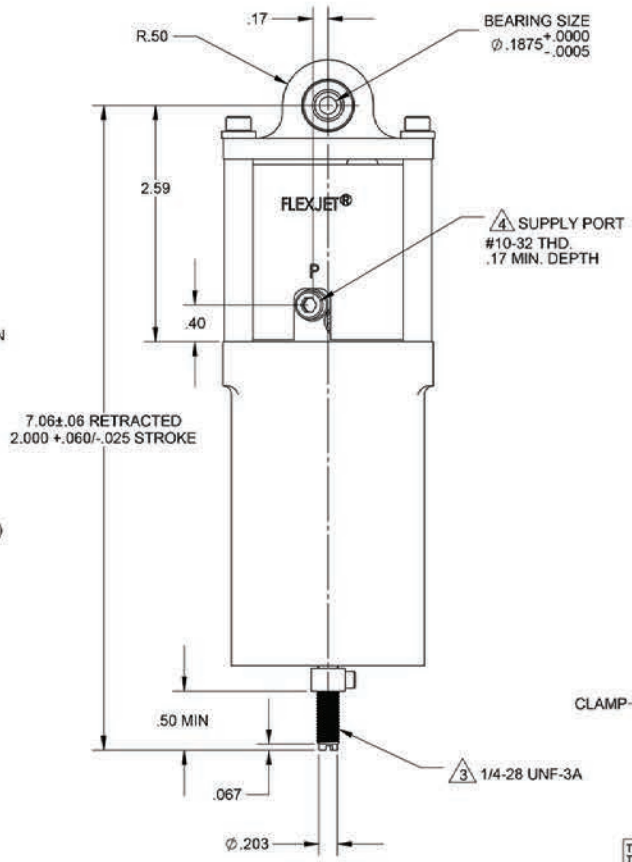

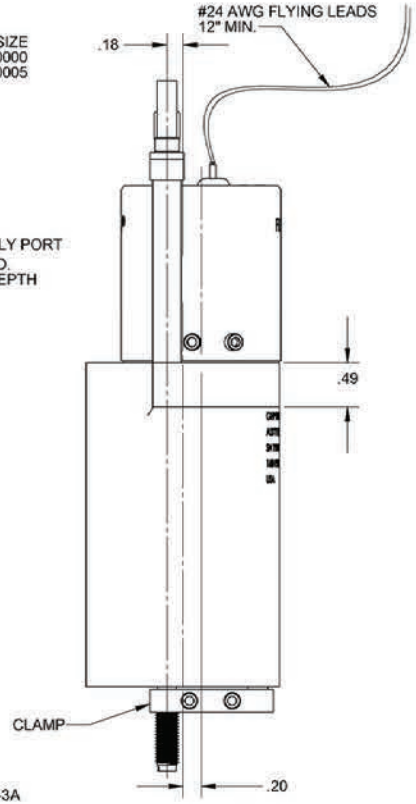

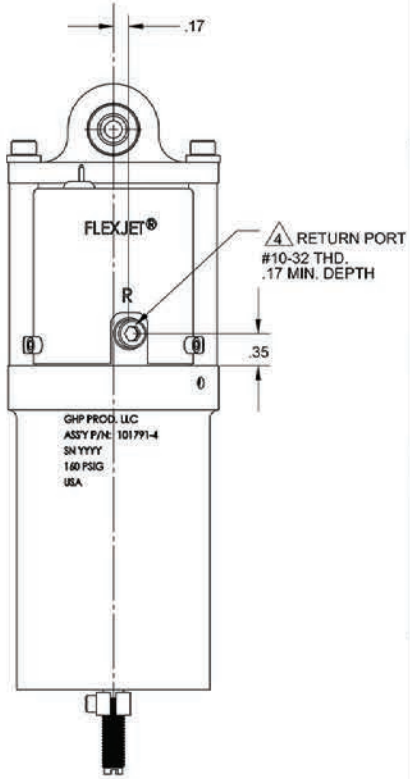

4 SHIPPING PLUG TO BE REMOVED BEFORE INSTALLATION

3 A 1/4-28 UNF JAM NUT IS RECOMMENDED TO PREVENT OVER-TORQUING OF CLAMP ON INSTALLATION

2. REF PERFORMANCE CHARACTERISTICS:

MEDIA: CLEAN, DRY AIR OR N2

FLOW RATE: 2.3 SCFM @ 100 PSIG

FILTRATION: 25 MICRON ABS, INTEGRAL (SERVO ONLY)

TEMPERATURE: -20°F TO +160°F

PRESSURE:
- OPERATING: 80 TO 160 PSIG
- PROOF: 250 PSIG
- BURST: 425 PSIG

MECHANICAL:
- PISTON DIA: 1.50 IN.
- ROD DIAMETER: 0.25 IN.
- SLEW RATE: 6.0 IN/SEC MIN. @ 100 PSIG
- STALL LOAD, EXT.: 140 LBS MIN. @ 100 PSIG
- RET.: 136 LBS MIN. @ 100 PSIG
- STROKE: 2.00 IN

ELECTRICAL:
- COIL RESISTANCE: 250 ± 25 OHMS
- VOLTAGE: 0 TO 10 V
- CONNECTION: #24 AWG FLYING LEADS, 12 INCHES MIN.

POLARITY: RED+ = ACTUATOR EXTENDS

SEALS: NITRILE, FLUOROCARBON

1. DESIGNED IN ACCORDANCE WITH GARNER HOLT PRODUCTIONS PERFORMANCE REQUIREMENTS

NOTES: UNLESS OTHERWISE SPECIFIED

INTERFACE CONTROL DRAWING

THIS PRINT IS THE PROPERTY OF JASC AND REPRESENTS A PROPRIETARY ARTICLE TO WHICH JASC RETAINS THE EXCLUSIVE RIGHT OF USE AND/OR SALE. THIS PRINT IS DISCLOSED IN CONFIDENCE AND POSSESSION OF IT DOES NOT CONVEY PERMISSION TO MANUFACTURE THE ARTICLE OR ARTICLES SHOWN HEREIN: SUCH PERMISSION BEING GRANTED ONLY BY SPECIFIC AUTHORIZATION IN WRITING SIGNED BY AN OFFICER OF JASC.

JASC®
Tempe, Arizona

DIMENSIONS APPLY AFTER PLATING
BREAK SHARP EDGES .005 - .015
MACHINED SURFACES .005 - .020R MACHINED FILLETS

REFERENCE
PDM

APPLICATION

UNLESS OTHERWISE SPECIFIED
DIMENSIONS ARE IN INCHES
SYMBOLS PER ANSI Y14.5
ALL COMMON ℄ DIA. Ø.005

TOLERANCES ARE:

FRACTIONS	DECIMALS	ANGLES
± 1/64	.X ±.1	±1°
	.XX ±.010	
	.XXX ±.005	
	.XXXX ±.0010	

CONTRACT NO.

APPROVALS		DATE
DRAWN	DWK	05/29/19
CHECKED	JFC	08/12/19
CHECKED		
CHECKED		

TITLE: FLEXJET 1.5 x 2.0 ICD

SIZE	CAGE	DWG. NO.
C	ØR293	ICD-101791-4

SCALE: 1:1 WEIGHT: 1.713 lbs SHT 1 OF 1

ICD-101791-4 NC

P/N 101792

2.0 Inch Bore FlexJet Actuator

Configuration	Bore x Stroke
101792-1	2.0″ x 0.5″
101792-2	2.0″ x 1.0″
101792-3	2.0″ x 1.5″
101792-4	2.0″ x 2.0″

Stall Load @ 100 PSIG

Extension: 250 Lb. Minimum

Retraction: 250 Lb. Minimum

Slew Rate @ 100 PSIG

3.5 In./Sec. Minimum

REVISIONS			
REV.	DATE	DESCRIPTION	BY
NC	8/14/2019	Initial Release	JFC

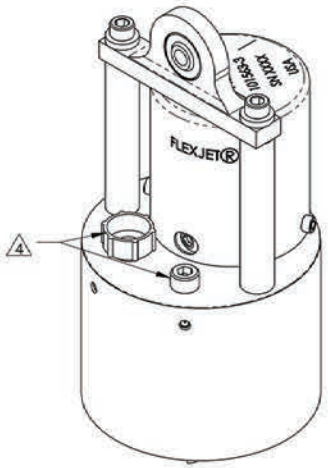

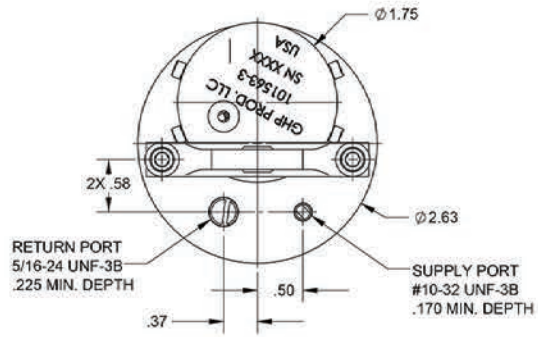

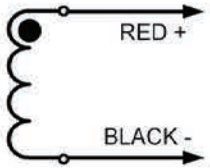

ELECTRICAL SCHEMATIC

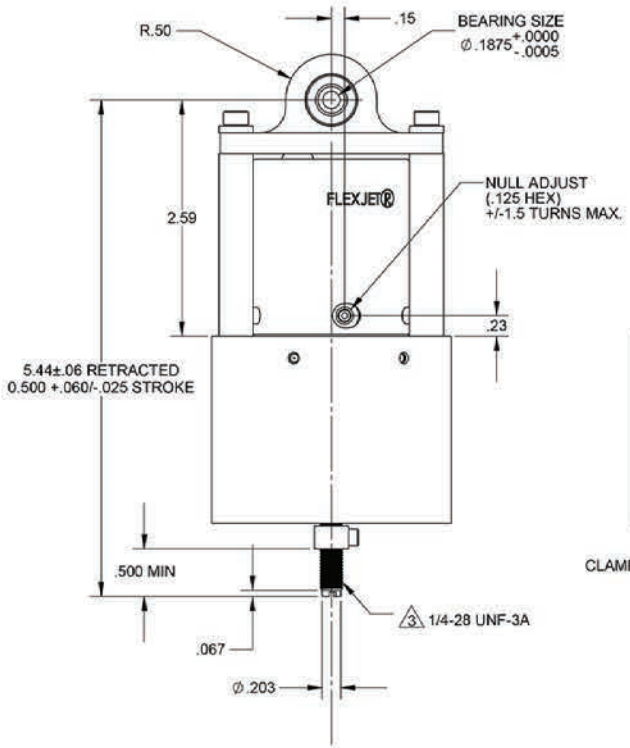

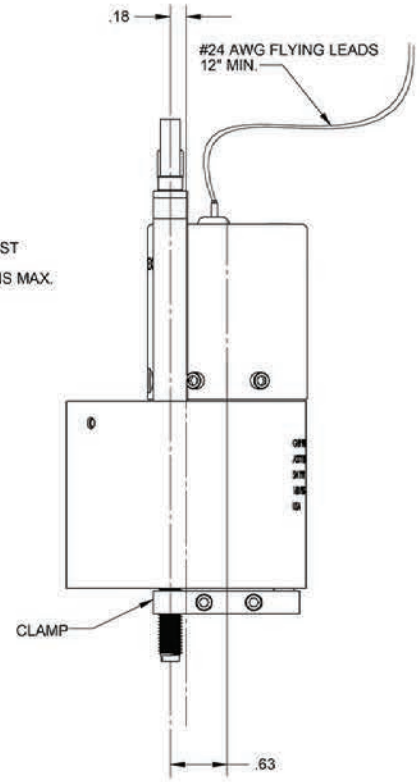

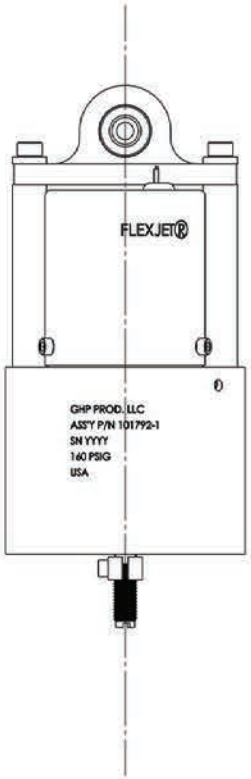

4 SHIPPING PLUG TO BE REMOVED BEFORE INSTALLATION

3 A 1/4-28 UNF JAM NUT IS RECOMMENDED TO PREVENT OVER-TORQUING OF CLAMP ON INSTALLATION

2. TECHNICAL AND PERFORMANCE CHARACTERISTICS:

MEDIA: CLEAN, DRY AIR OR N2

FLOW RATE: 2.3 SCFM @ 100 PSIG

FILTRATION: 25 MICRON ABS, INTEGRAL (SERVO ONLY)

TEMPERATURE: -20°F TO +160°F

PRESSURE:
- OPERATING: 80 TO 160 PSIG
- PROOF: 250 PSIG
- BURST: 425 PSIG

MECHANICAL:
- PISTON DIA: 2.00 IN.
- ROD DIAMETER: 0.25 IN.
- SLEW RATE: 3.5 IN/SEC MIN. @ 100 PSIG
- STALL LOAD, EXT.: 250 LBS MIN. @ 100 PSIG
- RET.: 250 LBS MIN. @ 100 PSIG
- STROKE: .050 IN

ELECTRICAL:
- COIL RESISTANCE: 250 ± 25 OHMS
- VOLTAGE: 0 TO 10 V
- CONNECTION: #24 AWG FLYING LEADS, 12 INCHES MIN.
- POLARITY: RED+ = ACTUATOR EXTENDS

SEALS: NITRILE, FLUOROCARBON

1. DESIGNED IN ACCORDANCE WITH GARNER HOLT PRODUCTIONS PERFORMANCE REQUIREMENTS

NOTES: UNLESS OTHERWISE SPECIFIED

INTERFACE CONTROL DRAWING

THIS PRINT IS THE PROPERTY OF JASC AND REPRESENTS A PROPRIETARY ARTICLE TO WHICH JASC RETAINS THE EXCLUSIVE RIGHT OF USE AND/OR SALE. THIS PRINT IS DISCLOSED IN CONFIDENCE AND POSSESSION OF IT DOES NOT CONVEY PERMISSION TO MANUFACTURE THE ARTICLE OR ARTICLES SHOWN HEREIN: SUCH PERMISSION BEING GRANTED ONLY BY SPECIFIC AUTHORIZATION IN WRITING SIGNED BY AN OFFICER OF JASC.

JASC® Tempe, Arizona

DIMENSIONS APPLY AFTER PLATING
BREAK SHARP EDGES .005 - .015
MACHINED SURFACES
.005 - .020R MACHINED FILLETS

REFERENCE
PDM

APPLICATION

UNLESS OTHERWISE SPECIFIED
DIMENSIONS ARE IN INCHES
SYMBOLS PER ANSI Y14.5
ALL COMMON ℄ DIA. Ø.005

TOLERANCES ARE:

FRACTIONS	DECIMALS	ANGLES
± 1/64	X ±.1	±1°
	.XX ±.010	
	.XXX ±.005	
	.XXXX ±.0010	

CONTRACT NO.

APPROVALS		DATE
DRAWN	DWK	05/29/19
CHECKED	JFC	8/14/2019
CHECKED		
CHECKED		

TITLE: FLEXJET 2.0 x 0.5 ICD

SIZE	CAGE	DWG. NO.
C	ØR293	ICD-101792-1

SCALE: 1:1 WEIGHT: 1.783 lbs SHT 1 OF 1

ICD-101792-1 NC

REVISIONS			
REV.	DATE	DESCRIPTION	BY
NC	8/26/2019	Initial Release	JFC

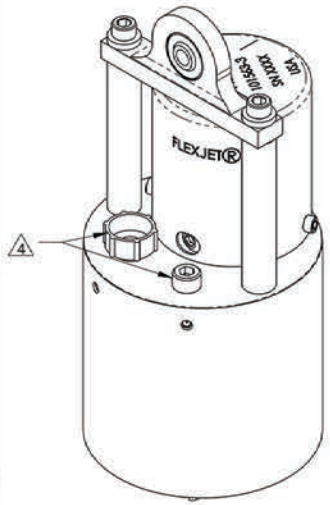

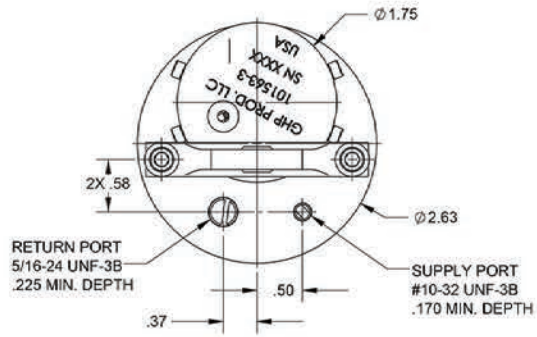

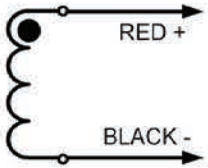

ELECTRICAL SCHEMATIC

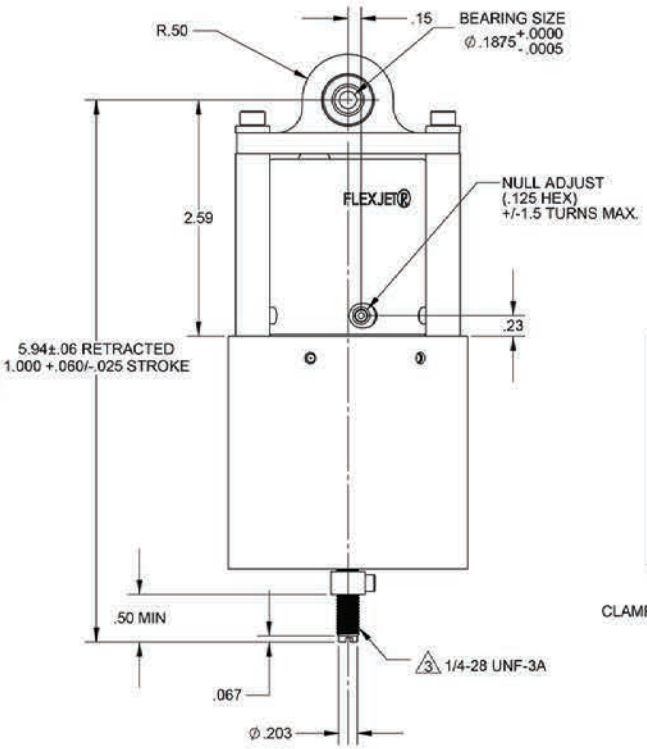

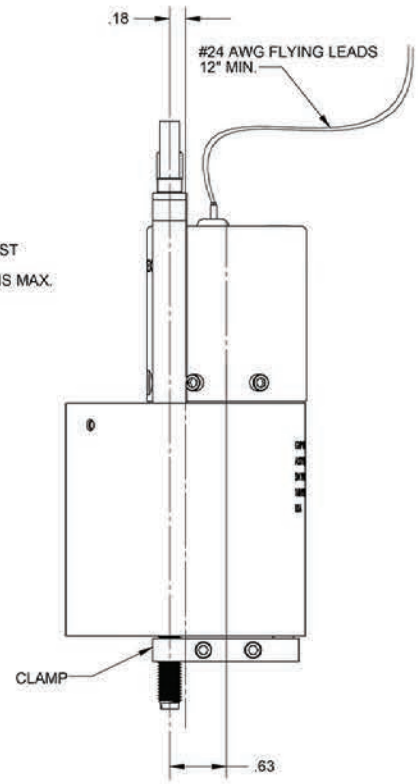

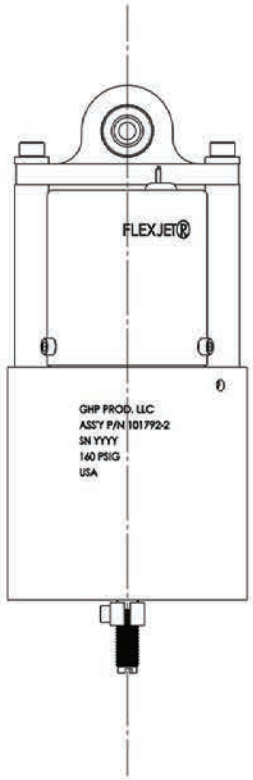

4 SHIPPING PLUG TO BE REMOVED BEFORE INSTALLATION

3 A 1/4-28 UNF JAM NUT IS RECOMMENDED TO PREVENT OVER-TORQUING OF CLAMP ON INSTALLATION

2. TECHNICAL AND PERFORMANCE CHARACTERISTICS:

MEDIA: CLEAN, DRY AIR OR N2

FLOW RATE: 2.3 SCFM @ 100 PSIG

FILTRATION: 25 MICRON ABS, INTEGRAL (SERVO ONLY)

TEMPERATURE: -20°F TO +160°F

PRESSURE:
- OPERATING: 80 TO 160 PSIG
- PROOF: 250 PSIG
- BURST: 425 PSIG

MECHANICAL:
- PISTON DIA: 2.00 IN.
- ROD DIAMETER: 0.25 IN.
- SLEW RATE: 3.5 IN/SEC MIN. @ 100 PSIG
- STALL LOAD, EXT.: 250 LBS MIN. @ 100 PSIG
- RET.: 250 LBS MIN. @ 100 PSIG
- STROKE: 1.00 IN

ELECTRICAL:
- COIL RESISTANCE: 250 ± 25 OHMS
- VOLTAGE: 0 TO 10 V
- CONNECTION: #24 AWG FLYING LEADS, 12 INCHES MIN.
- POLARITY: RED+ = ACTUATOR EXTENDS

SEALS: NITRILE, FLUOROCARBON

1. DESIGNED IN ACCORDANCE WITH GARNER HOLT PRODUCTIONS PERFORMANCE REQUIREMENTS

NOTES: UNLESS OTHERWISE SPECIFIED

INTERFACE CONTROL DRAWING

THIS PRINT IS THE PROPERTY OF JASC AND REPRESENTS A PROPRIETARY ARTICLE TO WHICH JASC RETAINS THE EXCLUSIVE RIGHT OF USE AND/OR SALE. THIS PRINT IS DISCLOSED IN CONFIDENCE AND POSSESSION OF IT DOES NOT CONVEY PERMISSION TO MANUFACTURE THE ARTICLE OR ARTICLES SHOWN HEREIN: SUCH PERMISSION BEING GRANTED ONLY BY SPECIFIC AUTHORIZATION IN WRITING SIGNED BY AN OFFICER OF JASC.

JASC® Tempe, Arizona

DIMENSIONS APPLY AFTER PLATING
BREAK SHARP EDGES .005 - .015
MACHINED SURFACES .005 - .020R MACHINED FILLETS

REFERENCE PDM

APPLICATION

UNLESS OTHERWISE SPECIFIED
DIMENSIONS ARE IN INCHES
SYMBOLS PER ANSI Y14.5
ALL COMMON ℄ DIA. Ø.005

TOLERANCES ARE:
FRACTIONS ± 1/64 | DECIMALS .X ±.1, .XX ±.010, .XXX ±.005, .XXXX ±.0010 | ANGLES ±1°

CONTRACT NO.

APPROVALS		DATE
DRAWN	DWK	05/29/19
CHECKED	JFC	8/26/2019
CHECKED		
CHECKED		

TITLE: FLEXJET 2.0 x 1.0 ICD

SIZE	CAGE	DWG. NO.
C	ØR293	ICD-101792-2

SCALE: 1:1 | WEIGHT: 1.900 lbs | SHT 1 OF 1

ICD-101792-2 NC

REVISIONS			
REV.	DATE	DESCRIPTION	BY
NC	8/26/2019	Initial Release	JFC

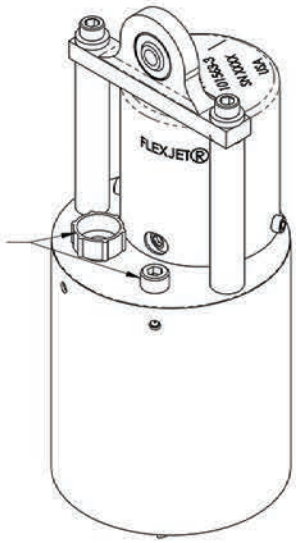

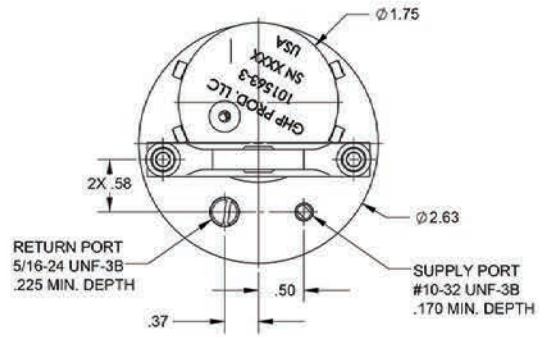

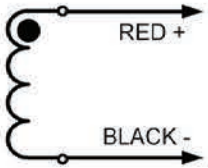

ELECTRICAL SCHEMATIC

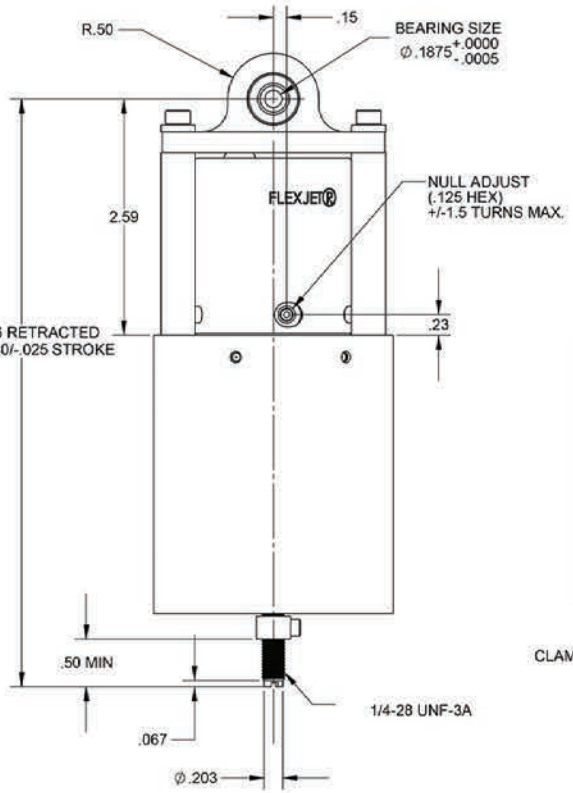

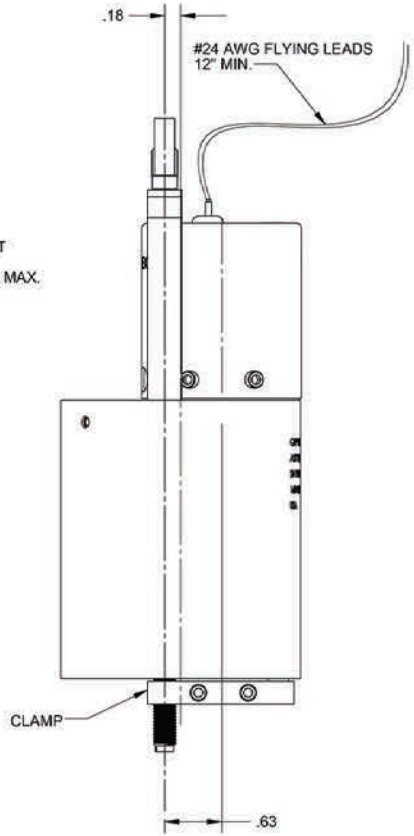

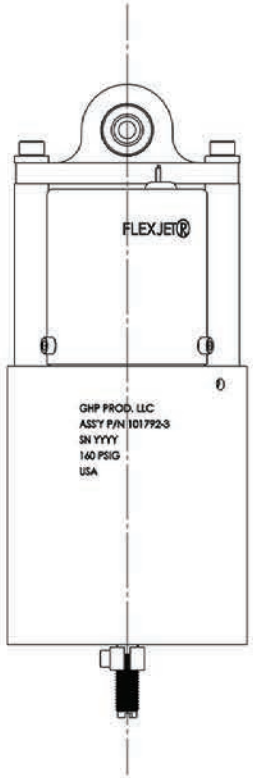

4 SHIPPING PLUG TO BE REMOVED BEFORE INSTALLATION

3 A 1/4-28 UNF JAM NUT IS RECOMMENDED TO PREVENT OVER-TORQUING OF CLAMP ON INSTALLATION

2. TECHNICAL AND PERFORMANCE CHARACTERISTICS:

MEDIA: CLEAN, DRY AIR OR N2

FLOW RATE: 2.3 SCFM @ 100 PSIG

FILTRATION: 25 MICRON ABS, INTEGRAL (SERVO ONLY)

TEMPERATURE: -20°F TO +160°F

PRESSURE:
- OPERATING: 80 TO 160 PSIG
- PROOF: 250 PSIG
- BURST: 425 PSIG

MECHANICAL:
- PISTON DIA: 2.00 IN.
- ROD DIAMETER: 0.25 IN.
- SLEW RATE: 3.5 IN/SEC MIN. @ 100 PSIG
- STALL LOAD, EXT.: 250 LBS MIN. @ 100 PSIG
- RET.: 250 LBS MIN. @ 100 PSIG
- STROKE: 1.50 IN

ELECTRICAL:
- COIL RESISTANCE: 250 ± 25 OHMS
- VOLTAGE: 0 TO 10 V
- CONNECTION: #24 AWG FLYING LEADS, 12 INCHES MIN.
- POLARITY: RED+ = ACTUATOR EXTENDS

SEALS: NITRILE, FLUOROCARBON

1. DESIGNED IN ACCORDANCE WITH GARNER HOLT PRODUCTIONS PERFORMANCE REQUIREMENTS

NOTES: UNLESS OTHERWISE SPECIFIED

INTERFACE CONTROL DRAWING

THIS PRINT IS THE PROPERTY OF JASC AND REPRESENTS A PROPRIETARY ARTICLE TO WHICH JASC RETAINS THE EXCLUSIVE RIGHT OF USE AND/OR SALE. THIS PRINT IS DISCLOSED IN CONFIDENCE AND POSSESSION OF IT DOES NOT CONVEY PERMISSION TO MANUFACTURE THE ARTICLE OR ARTICLES SHOWN HEREIN: SUCH PERMISSION BEING GRANTED ONLY BY SPECIFIC AUTHORIZATION IN WRITING SIGNED BY AN OFFICER OF JASC.

JASC® Tempe, Arizona

DIMENSIONS APPLY AFTER PLATING
BREAK SHARP EDGES .005 - .015
MACHINED SURFACES .005 - .020R MACHINED FILLETS

REFERENCE PDM

APPLICATION

UNLESS OTHERWISE SPECIFIED
DIMENSIONS ARE IN INCHES
SYMBOLS PER ANSI Y14.5
ALL COMMON ℄ DIA. Ø.005

TOLERANCES ARE:

FRACTIONS	DECIMALS	ANGLES
± 1/64	.X ±.1	±1°
	.XX ±.010	
	.XXX ±.005	
	.XXXX ±.0010	

CONTRACT NO.

APPROVALS		DATE
DRAWN	DWK	05/29/19
CHECKED	JFC	8/26/2019
CHECKED		
CHECKED		

TITLE: FLEXJET 2.0 x 1.5 ICD

SIZE	CAGE	DWG. NO.
C	ØR293	ICD-101792-3

SCALE: 1:1 WEIGHT: 2.018 lbs SHT 1 OF 1

ICD-101792-3 NC

REVISIONS			
REV.	DATE	DESCRIPTION	BY
NC	8/26/2019	Initial Release	JFC

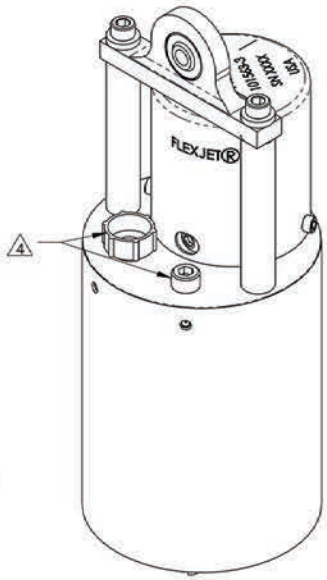

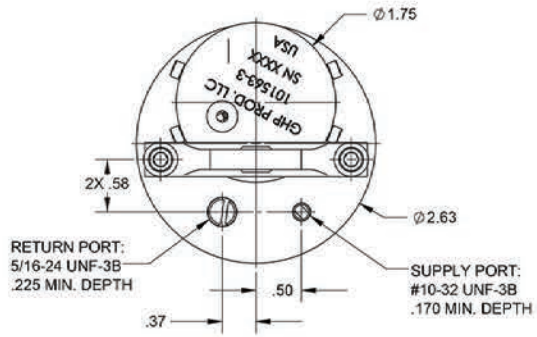

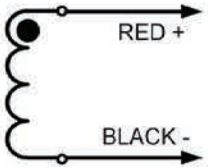

ELECTRICAL SCHEMATIC

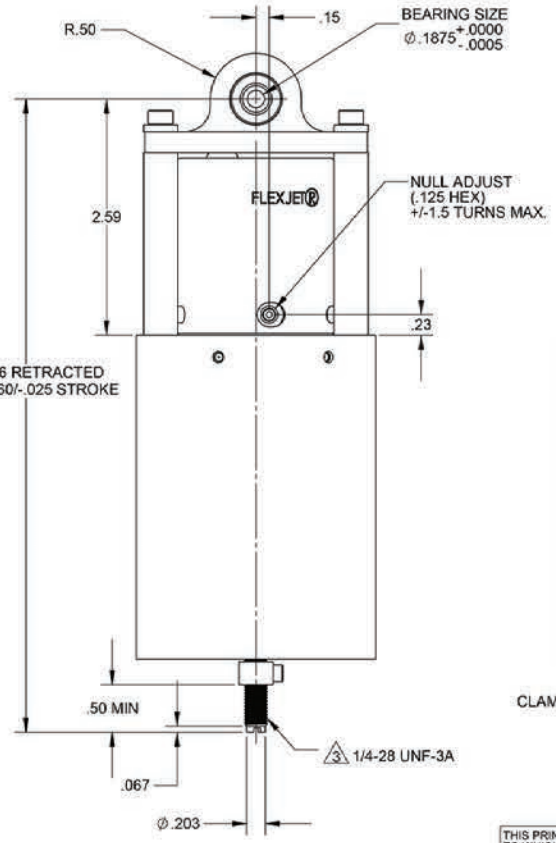

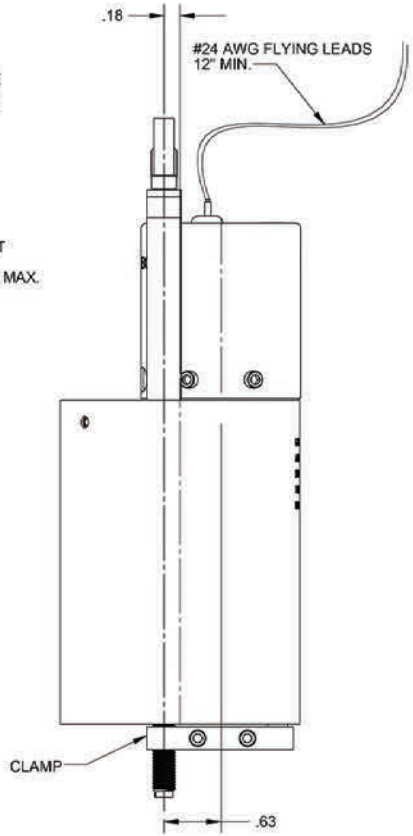

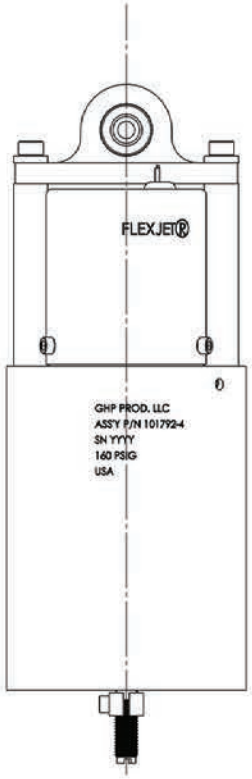

4 SHIPPING PLUG TO BE REMOVED BEFORE INSTALLATION

3 A 1/4-28 UNF JAM NUT IS RECOMMENDED TO PREVENT OVER-TORQUING OF CLAMP ON INSTALLATION

2. TECHNICAL AND PERFORMANCE CHARACTERISTICS:

MEDIA: CLEAN, DRY AIR OR N2

FLOW RATE: 2.3 SCFM @ 100 PSIG

REQUIRED FILTRATION: 25 MICRON ABS, INTEGRAL (SERVO ONLY)

TEMPERATURE: -20°F TO +160°F

PRESSURE:
- OPERATING: 80 TO 160 PSIG
- PROOF: 250 PSIG
- BURST: 425 PSIG

MECHANICAL:
- PISTON DIA: 2.00 IN.
- ROD DIAMETER: 0.25 IN.
- SLEW RATE: 3.5 IN/SEC MIN. @ 100 PSIG
- STALL LOAD, EXT.: 250 LBS MIN. @ 100 PSIG
- RET.: 250 LBS MIN. @ 100 PSIG
- STROKE: 2.00 IN

ELECTRICAL:
- COIL RESISTANCE: 250 ± 25 OHMS
- VOLTAGE: 0 TO 10 V
- CONNECTION: #24 AWG FLYING LEADS, 12 INCHES MIN.
- POLARITY: RED+ = ACTUATOR EXTENDS

SEALS: NITRILE, FLUOROCARBON

1. DESIGNED IN ACCORDANCE WITH GARNER HOLT PRODUCTIONS PERFORMANCE REQUIREMENTS

NOTES: UNLESS OTHERWISE SPECIFIED

INTERFACE CONTROL DRAWING

THIS PRINT IS THE PROPERTY OF JASC AND REPRESENTS A PROPRIETARY ARTICLE TO WHICH JASC RETAINS THE EXCLUSIVE RIGHT OF USE AND/OR SALE. THIS PRINT IS DISCLOSED IN CONFIDENCE AND POSSESSION OF IT DOES NOT CONVEY PERMISSION TO MANUFACTURE THE ARTICLE OR ARTICLES SHOWN HEREIN: SUCH PERMISSION BEING GRANTED ONLY BY SPECIFIC AUTHORIZATION IN WRITING SIGNED BY AN OFFICER OF JASC.

JASC® Tempe, Arizona

DIMENSIONS APPLY AFTER PLATING
BREAK SHARP EDGES .005 - .015
MACHINED SURFACES .005 - .020R MACHINED FILLETS

REFERENCE PDM

APPLICATION

UNLESS OTHERWISE SPECIFIED
DIMENSIONS ARE IN INCHES
SYMBOLS PER ANSI Y14.5
ALL COMMON ℄ DIA. Ø.005

TOLERANCES ARE:

FRACTIONS	DECIMALS	ANGLES
± 1/64	.X ±.1	±1°
	.XX ±.010	
	.XXX ±.005	
	.XXXX ±.0010	

CONTRACT NO.

APPROVALS		DATE
DRAWN	DWK	05/29/19
CHECKED	JFC	08/14/19
CHECKED		
CHECKED		

TITLE: FLEXJET 2.0 x 2.0 ICD

SIZE	CAGE	DWG. NO.
C	ØR293	ICD-101792-4

SCALE: 1:1 WEIGHT: 2.137 lbs SHT 1 OF 1

ICD-101792-4 NC

P/N 101548-1

1.0 Inch FlexJet Servo

<u>Stall Load @ 100 PSIG</u>

Using a 1.06″ bore pneumatic cylinder

Extension: 64 Lb. Minimum

Retraction: 59 Lb. Minimum

(Load varies with cylinder bore size)

REVISIONS			
REV.	DATE	DESCRIPTION	BY
NC	9/6/2012	Initial Release	KJM

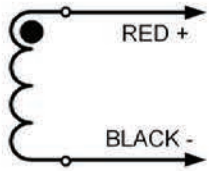

ELECTRICAL SCHEMATIC

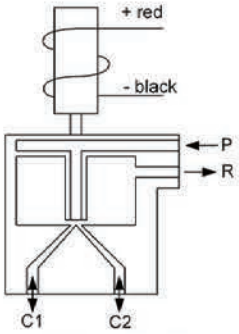

FLUID SCHEMATIC

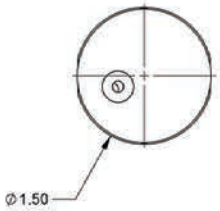

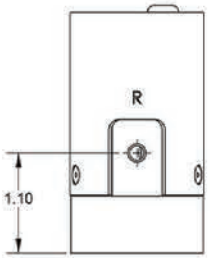

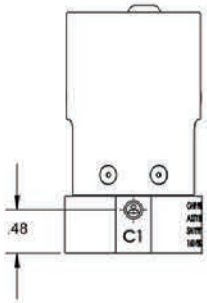

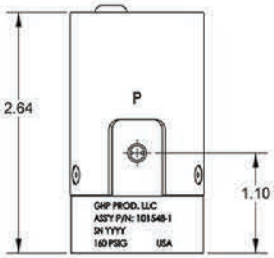

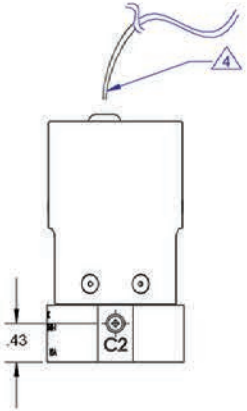

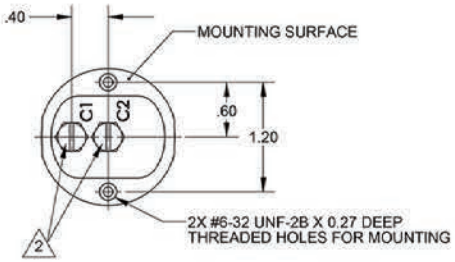

4. 24 AWG TEFLON INSULATED FLYING LEADS, 14 INCHES MIN. LENGTH

3. IN ORDER TO MAINTAIN PERFORMANCE, ALLOW APPROXIMATELY 1.5" SPACING BETWEEN ADJACENT SERVOS IF CLUSTERED

2. ONE C1 AND ONE C2 PORT MUST BE PLUGGED TO ENSURE PROPER PERFORMANCE. MOUNTING SURFACE C1 AND C2 PORTS PLUGGED FOR ILLUSTRATION

1. PERFORMANCE CHARACTERISTICS:

MEDIA: DRY AIR, NITROGEN

FLOW RATE: 0.8 SCFM @ 100 PSIG

REQUIRED FILTRATION: 25 MICRON ABSOLUTE

OPERATING TEMPERATURE: -20°F TO 160°F

PRESSURE
OPERATING: 80 TO 160 PSIG
PROOF: 250 PSIG
BURST: 425 PSIG

ELECTRICAL
COIL RESISTANCE: 250 ±15 OHMS
RATED CURRENT: -20 TO +20 mA

POLARITY: RED+ = FLOW OUT OF C2 TRANSFERS TO C1

SEALS: VITON, BUNA-N

NOTES: UNLESS OTHERWISE SPECIFIED

THIS PRINT IS THE PROPERTY OF JASC AND REPRESENTS A PROPRIETARY ARTICLE TO WHICH JASC RETAINS THE EXCLUSIVE RIGHT OF USE AND/OR SALE. THIS PRINT IS DISCLOSED IN CONFIDENCE AND POSSESSION OF IT DOES NOT CONVEY PERMISSION TO MANUFACTURE THE ARTICLE OR ARTICLES SHOWN HEREIN: SUCH PERMISSION BEING GRANTED ONLY BY SPECIFIC AUTHORIZATION IN WRITING SIGNED BY AN OFFICER OF JASC.

DIMENSIONS APPLY AFTER PLATING
BREAK SHARP EDGES .005 - .015
MACHINED SURFACES .005 - .020R MACHINED FILLETS

REFERENCE
PDM

APPLICATION

UNLESS OTHERWISE SPECIFIED
DIMENSIONS ARE IN INCHES
SYMBOLS PER ANSI Y14.5
ALL COMMON ℄ DIA. ⌀0.005

TOLERANCES ARE:
FRACTIONS ± 1/64 | DECIMALS X ±.1, XX ±.010, XXX ±.005, XXXX ±.0010 | ANGLES ±1°

CONTRACT NO.		
APPROVALS		DATE
DRAWN	KJM	4/4/11
CHECKED	JFC	9/4/12
CHECKED		
CHECKED		

JASC®
Tempe, Arizona

TITLE: MANIFOLD FLEXJET SERVO

SIZE	CAGE	DWG. NO.
C	ØR293	ICD-101548-1

SCALE: 1:1 | WEIGHT: 0.433 lbs | SHT 1 OF 1

NC
ICD-101548-1

2303 West Alameda Drive
Tempe, AZ 85282
Tel: 602.438.4400
www.jasc-controls.com

O. Miller Associates, LLC
3564 Central Ave, Suite 2C
Riverside, CA 92506
Tel: 562.708.0222
bill@omiller.com